Gas Discharge Tubes (GDT) 2R-4S Series

Description

Gas discharge tubes (GDT) use noble gasses enclosed in ceramic tubes to provide an alternate circuit path for voltage spikes. The ceramic envelope and with nickel connectors allow for high loads. 2R-4S Gas Discharge Tubes (GDT) series has a surge rating of 3kA, 8/20μs.Offered in a Squared Surface Mount package, which helps to make pick and place on PCB process easier.

This GDT series is perfectly suited for broadband equipment applications. The GDT's low off-state capacitance is compatible with high bandwidth applications and this capacitance loading value does not vary if the voltage across the GDT changes.

2R-4S Gas Discharge Tube (GDT) series are specifically designed for protection of electrical, multimedia, and communication equipment against over voltage transients in surface mount assembly applications.

Electrical symbol

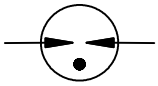

Features

- Excellent response to fast rising transients
- Stable breakdown voltage
- GHz working frequency
- 8/20μs Impulse current capability:3KA
- Surface Mount package
- Non-Radioactive
- Ultra Low capacitance (<0.8pF)
- Size: 4.0mm*4.2mm*4.2mm
- Storage and operational temperature: -40~+90°C

Applications

- CATV equipment
- Antennas
- RS 485
- Telecom Base Station
- Power Supply AC Main
- EV power Charging
- Inverter/Variable Frequency Drivers (VFDs)
- IEEE 802.3 compliant Ethernet interfaces
- Broad Band equipment
- xDSL, ADSL, ADSL2, VDSL, and VDSL2
- Medical Electronics
- Test Equipment
- General Telecom Equipment
- Renewable Energy

Part Number Code

2 R x x x - 4 S

- 2 R: Electrode Numbers
  2R: 2 Electrodes
- x x x: DC Spark-over Voltage
- 4: Product Series
  Size: 4.0mm*4.2mm*4.2mm
- S: Lead Type
  S:SMD

Electrical Characteristics

Part Number	DC Spark-over Voltage [1) 2)] @100V/S	Impulse Spark-over Voltage		Insulation Resistance [3)]	Capacitance @1MHz	Glow Voltage @10mA	Arc Voltage @1A	Life Ratings			
		100V/μS	1KV/μS					Impulse Discharge Current @8/20μS		Alternating Discharge Current @50Hz 1S	Impulse Life @10/1000μS
		Max	Max	Min	Max	Typical	Typical	±5 times	1 time	10 times	300 times
	V	V	V	GΩ	pF	V	V	KA	KA	A	A
2R075-4S	75±20%	500	600	1	0.8	60	10	3	6	3	100
2R090-4S	90±20%	500	600	1	0.8	60	10	3	6	3	100
2R150-4S	150±20%	500	600	1	0.8	60	10	3	6	3	100
2R230-4S	230±20%	600	700	1	0.8	60	10	3	6	3	100
2R250-4S	250±20%	600	700	1	0.8	60	10	3	6	3	100
2R300-4S	300±20%	750	850	1	0.8	60	10	3	6	3	100
2R350-4S	350±20%	800	900	1	0.8	60	10	3	6	3	100
2R400-4S	400±20%	800	900	1	0.8	135	15	3	6	3	100
2R470-4S	470±20%	800	900	1	0.8	135	15	3	6	3	100
2R600-4S	600±20%	900	1000	1	0.8	135	15	3	6	3	100
2R800-4S	800±20%	1300	1400	1	0.8	135	15	3	6	3	100

Glow to Arc transition Current…….....	<0.3A
Weight…….....	~0.26g
Operation and storage temperature…….....	-40~+90°C
Climatic category (IEC 60068-1)…….....	40/90/21
Marking, blue negative…….....	**RUILON XXX Y** XXX -Nominal voltage Y -Year of production
Surface treatment…….....	Matte-tin plated
Moisture sensitivity level [4)] ……	1

[1)] At delivery AQL 0.65 level II, DIN ISO 2859.

[2)] In ionized mode.

[3)] Insulation Resistance Measuring Voltage:

75V~150V at DC 50V

Other at DC 100V

[4)] Tests according to JEDEC J-STD-020.

Terms in accordance with ITU-T K.12, IEC 61643-311, GB/T 9043, GB/T18802.311.

Dimensions

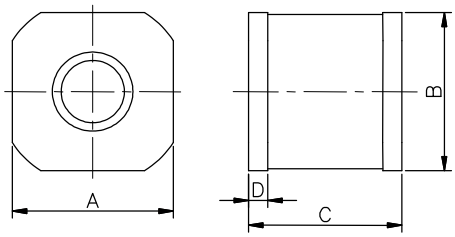

Symbo	Millimeters	Inches
A	4.2±0.2	0.165±0.008
B	4.2±0.2	0.165±0.008
C	4.0±0.2	0.157±0.008
D	0.5±0.1	0.020±0.004
X	1.3	0.051
X1	3.6	0.142
Y	5.0	0.197

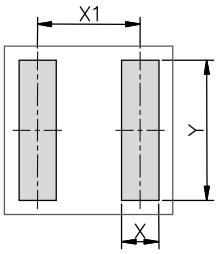

Recommended Soldering Pad Layout

Packaging Information

Tape Specifications

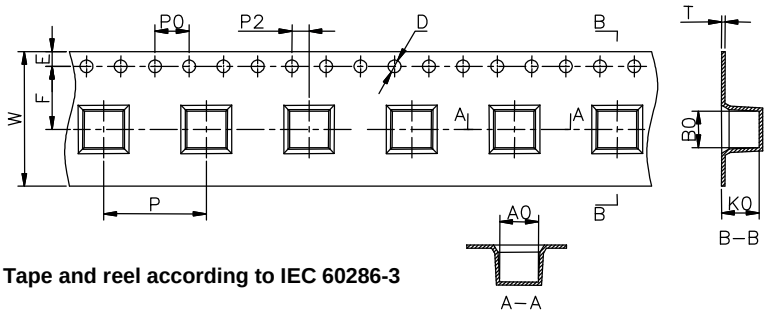

Tape and reel according to IEC 60286-3

Symbol	Millimeters	Inches
W	16±0.3	0.630±0.012
A0	4.5±0.1	0.177±0.004
B0	4.3±0.1	0.17±0.004
K0	4.4±0.1	0.173±0.004
P	12±0.1	0.472±0.004
F	7.5±0.1	0.295±0.004
E	1.75±0.1	0.069±0.004
D	1.5+0.1/-0.0	0.059+0.004/-0.0
P0	4±0.1	0.157±0.004
P2	2±0.1	0.079±0.004
T	0.4±0.1	0.016±0.004
D0	13.3±0.15	0.524±0.006
D1	330±2	12.992±0.079
D2	100+1/-2	3.937+0.039/-0.079
W1	16.5±0.4	0.65±0.016

Reel Specifications

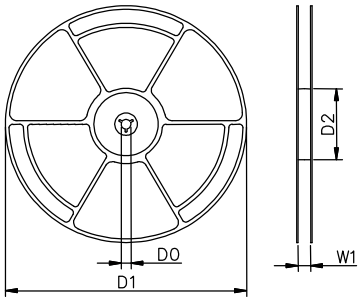

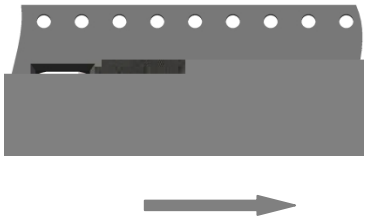

Direction of Unreeling

Terms and definitions

NO.	Item	Definitions
1	**Gas discharge tube(GDT)**	A gap, or several gaps, in an enclosed discharge medium, other than air at atmospheric pressure, designed to protect apparatus or personnel, or both, from high transient voltages. Also referred to as "gas tube surge arrester".
2	**DC Spark-over Voltage**	The voltage at which the gas discharge tube sparks over with slowly increasing d.c. voltage.
3	**Impulse Spark-over Voltage**	The highest voltage which appears across the terminals of a gas discharge tube in the period between the application of an impulse of given wave-shape and the time when current begins to flow.
5	**Arc voltage**	Voltage drop across the GDT during arc current flow.
6	**Glow voltage**	Peak value of voltage drop across the GDT when a glow current is flowing.
7	**Impulse discharge current 8/20μs**	Current impulse with a nominal virtual front time of 8 μs and a nominal time to half-value of 20 μs.
8	**Alternating Discharge Current**	The rms value of an approximately sinusoidal alternating current passing through the gas discharge tube.
9	**Insulation Resistance**	Insulation resistance shall be measured from each terminal to every other terminal of the GDT. The test is performed with DC50V when normal spark-over Voltage 70~150V, others with DC100V.
10	**Capacitance**	The capacitance shall be measured once at 1 MHz between all terminals unless otherwise specified.

Cautions and warnings

- Do not operate surge arresters in power supply networks, whose maximum operating voltage exceeds the minimum spark-over voltage of the surge arresters.
- Surge arresters may become hot in the event of longer periods of current stress (burn risk). In the event of overload the connectors may fail or the component may be destroyed.
- Surge arresters must be handled with care and must not be dropped.
- Do not continue to use damaged surge arresters.
- The shown SMD pad dimensions represent a safe way to mount the arrester and are a recommendation of the manufacturer. During the reflow process it must be assured that no solder material reduces the insulation distance between the pads below the arrester.
- SMD surge arresters should be soldered within 24 month after shipment.